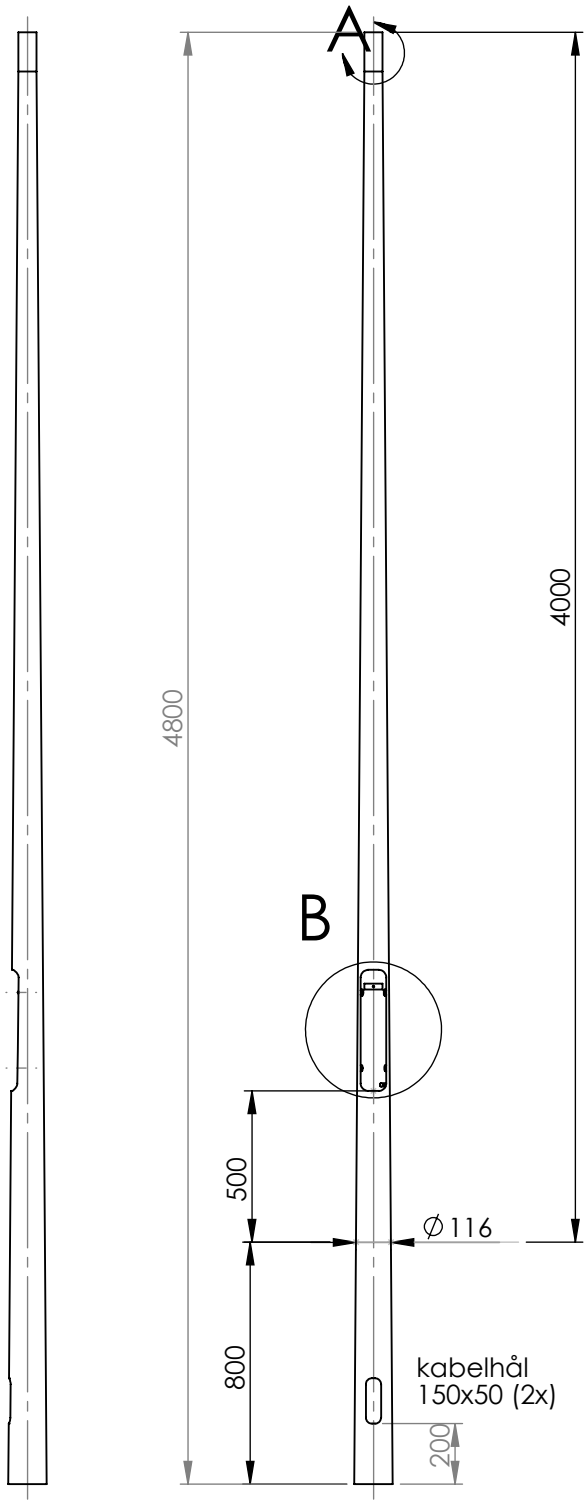

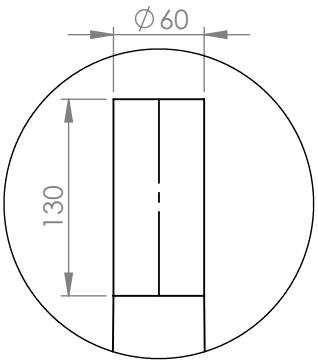

DETAIL A
SCALE 1 : 5

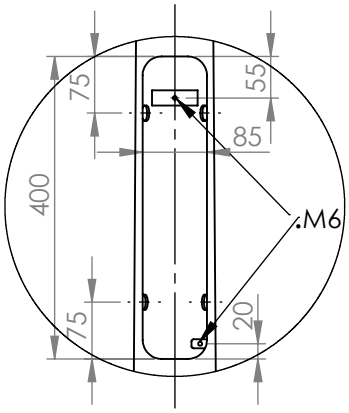

DETAIL B
SCALE 1 : 10

konicitet 14mm/m

Ritad av:	Datum:	Godk. av:	Godk./Datum:	Material:	Vikt:	Tolerans:	Format:
TH	2010-12-16			S235JRG2	30.86 kg	ISO 2768-1 c Skarpa kanter brutna	A4

moramast

Benämning:	Skala:
KLS 40/60-116 FL	1:25
Order:	Revision: A
Ritningsnummer: 7781852	Blad: 1/1

THIS DRAWING AND ALL OPPURTENANT MATTER SHALL REMAIN THE COMPANY MORA MAST AB PROPERTY. THEY SHALL NOT WITHOUT OUR WRITTEN PERMISSION, EITHER IN THEIR ORIGINAL STATE OR WITH ANY CHANGES BE COPIED OR MANIFOLDED. SHOWN TO OR IN ANY OTHER WAY COMMUNICATED TO OR HANDED OVER TO ANY PART.