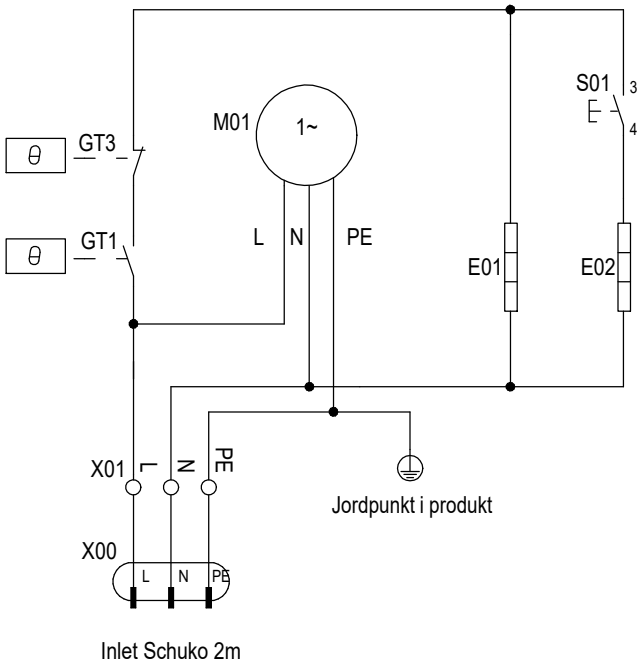

PC.	Position	Description	Type	Manufacturer	Data	Article No.	E-number(SE)
1	E01	Rörelement / Heating element	505134790I	Backer	2100W/230V	241029	
1	E02	Rörelement / Heating element	505134790I	Backer	700W/230V	241030	
1	GT1	Termostat / Thermostat	TY53A55A101	E.G.O. Elektro-Geräte	5-35° C	2074	
1	GT3	Överhettningsskydd / Overheating Protection	1NT01L-0206-L70-11	Stig Wahlström	65° C	14563	
1	M01	Fläkt / Fan	K2E220-RB06-01	Ebm-Papst AB	230V, 102W	241008	
1	S01	Tryckknapp / Pushbutton	L21CB03	Baco	Svart / Black		E3756172
1	S01	Kontaktblock / Contact block	331E10	Baco	NO		E3756002
1	X00	Sladdställ / Cable with Plug	H07RN-F, 3x1,5	Samhall	Schuko, 2m	17017	
1	X01	Plint / Terminal	Z 10.5	Svenska Helag AB	400V, 16A, 3-P	40075	

ARTIKELNR./ ARTICLE NO.
EB12291

MÄRKSTRÖM/ CURRENT RATING
10A / 13A

MEASURING EQUIPMENT
CURR.-TRAFO-SPACE | ENERGY-METER-SPACE

FAST ANSLUTNING/ FIXED CONNECTIONS
<125A | >125A

CEE-OUTLETS 3-POLE/230V
16A | 32A | 63A | 125A

SCHUKO OUTLETS 2-POLE/230V

CEE-OUTLETS 5-POLE/400V
16A | 32A | 63A | 125A

JFB/RCCB
<0,03A | >0,3A | >0,03A & <0,3A

JFB/RCCB
Variable

VIKT/WEIGHT
12 kg

This drawing is property of El-Björn. May not be copied, shown or distributed without our written permission.

TF3 EL B

EL-BJÖRN
www.elbjorn.com

RITAD AV/DRAWN BY: CG
DATUM/DATE: 160920
SIGN:
REVISION/ISSUE: B 10/9 -19
NEXT SHEET:
SHEET: 1
RITNINGS NR./DRAWING: EB12291