PRODUCT SPECIFICATION

CONNECT IT

EUROLAN SFP

SFP+ 10G SM LC

Ordering information		
Part number	E-number	Description
201-SFP-20-10G-1310	5173445	SFP+ 10G SINGLEMODE LC 20KM

Eurolan Fiber Modules deliver reliable fiber-optic connectivity for professional installations where both standards compliance and operational reliability are essential. With broad compatibility and a robust technical design, these SFP modules are engineered for long-term use in demanding network environments. Compatible with Zyxel, TP-Link, and many other brands.

Feature:

- SFP+ package with LC connector
- 1310nm DFB Laser and PIN photo detector
- Up to 20km transmission on SMF
- Power dissipation < 1W
- LVPECL compatible data input/output interface
- Low EMI and excellent ESD protection
- laser safety standard IEC-60825 compliant
- Compatible with RoHS
- Compatible with SFF8472

Application:

- Ethernet
- Fiber Channel

Key Features:

- Up to 10Gbps at 1310nm
- Up to 20 km reach over single-mode fiber
- Fully MSA-compliant
- CE and RoHS compliant
- Operating temperature range: 0 °C to +70 °C

Absolute maximum ratings

Parameter	Symbol	Min	Max	Units
Storage temperature	Tst	-40	+85	°C
Supply voltage	Vcc	0	+3.6	V
Operating relative humidity	RH	0	85	%

PRODUCT SPECIFICATION

CONNECT IT

EUROLAN SFP

SFP+ 10G SM LC

Operation environment						
Parameter		**Symbol**	**Min**	**Typical**	**Max**	**Units**
Supply voltage		Vcc	3.15		3.45	V
Operating case temperature	Commercial	Tc	0		+70	°C
Power dissipation					1	W
Data rate				10.3125		Gbps

Optical characteristics (Ambient Operating Temperature 0°C to +70°C, Vcc =3.3 V)					
Parameter	**Symbol**	**Min**	**Typical**	**Max**	**Units**
Transmitter section					
Center wavelength	λo	1290	1310	1330	nm
Side-mode suppression ratio	SMSR	35	-	-	dB
Average output power	Po	-5	-	±0.5	dBm
Extinction ratio	Er	3.5	-	-	dB
Dispersion penalty				3.2	dB
Relative Intensity noise	$RIN_{12}OMA$			-128	dB/Hz
Total jitter	Tj	IEEE 802.3ae			
Receiver section					
Center wavelength	λo		1310		nm
Receiver sensitivity	Rsen			-13	dBm
Stressed sensitivity	Rsen			-12	dBm
Receiver overload	Rov	-3			dBm
Return loss		12			dB
LOS Assert	LOS_A	-28			dBm
LOS Dessert	LOS_D			-14	dBm
LOS Hysteresis		0.5		4	dBm

PRODUCT SPECIFICATION

CONNECT IT

EUROLAN SFP

SFP+ 10G SM LC

Electrical characteristics (Ambient Operating Temperature 0°C to +70°C, Vcc =3.3 V)						
Parameter		**Symbol**	**Min**	**Typical**	**Max**	**Units**
Transmitter section						
Input differential impendance		Zin	90	100	110	Ohm
Data input swing differential		Vin	180		700	mV
TX Disable	Disable		2.0		Vcc	V
	Enable		0		0.8	V
TX Fault	Assert		2.0		Vcc	V
	Deassert		0		0.8	V
Receiver section						
Output differential impendence		Zout		100		Ohm
Data output swing differential		Vout	300		800	mV
Rx_LOS	Assert		2.0		Vcc	V
	Deassert		0		0.8	V

Diagnostics				
Parameter	**Range**	**Accuracy**	**Unit**	**Calibration**
Temperature	-10 ~ 75	±5	°C	Internal
Voltage	3.15 ~ 3.45	0.1	V	Internal
Bias current	10 ~ 80	±2	mA	Internal
Tx power	-6 ~ 1	±2	dBm	Internal
Rx power	-16 ~ -3	±3	dBm	Internal

PRODUCT SPECIFICATION

CONNECT IT

EUROLAN SFP

SFP+ 10G SM LC

EEPROM INFORMATION (A0)				
Addr	**Field size (bytes)**	**Name of field**	**HEX**	**Description**
0	1	Identifier	03	SFP
1	1	Ext identifier	04	MOD4
2	1	Connector	07	LC
3-10	8	Tranceiver	10 00 00 00 00 00 00 00	Transmitter code
11	1	Encoding	06	64B66B
12	1	BR, nominal	67	1000 Mbps
13	1	Reserved	00	
14	1	Length (9um)-km	14	20km
15	1	Length (9um)	00	
16	1	Length (50um)	00	
17	1	Length (62,5um)	00	
18	1	Length (copper)	00	
19	1	Reserved	00	
20-35	16	Vendor name	57 49 4E 54 4F 50 20 20 20 20 20 20 20 20 20 20	WINTOP
36	1	Reserved	00	
37-39	3	Vendor OUI	00 00 00	
40-55	16	Vendor PN	xx xx xx xx xx xx xx xx xx xx xx xx xx xx xx xx	ASC II
56-59	4	Vendor rev	31 2E 30 20	V1.0
60-61	2	Wavelength	05 1E	1310nm
62	1	Reserved	00	
63	1	CC BASE	XX	Check sum of byte 0~62
64-65	2	Options	00 1A	LOS, TX_DISABLE, TX_FAULT
66	1	BR, max	00	
67	1	BR, min	00	
68-83	16	Vendor SN	00 00 00 00 00 00 00 00	Unspecified
84-91	8	Vendor date code	XX XX XX 20	Year, month, day
92-94	3	Reserved	00	
95	1	CC_EXT	XX	Check sum of byte 64~94
96-255	160	Vendor specific		

EUROLAN SFP

SFP+ 10G SM LC

Pin description			
Pins	**Name**	**Description**	**Note**
1	VeeT	Transmitter ground	
2	Tx fault	Transmitter fault indication	1
3	Tx disable	Transmitter disable	2
4	MOD DEF2	Module definition 2	3
5	MOD DEF1	Module definition 1	3
6	MOD DEF0	Module definition 0	3
7	RS0	Not connected	
8	LOS	Loss of signal	4
9	RS1	Not connected	
10	VeeR	Receiver ground	
11	VeeR	Receiver ground	
12	RD-	Inv. Received data output	5
13	RD+	Ireceived data output	5
14	VeeR	Receiver ground	
15	VccR	Receiver power	
16	VccT	Transmitter power	
17	VeeT	Transmitter ground	
18	TD+	Transmit data input	6
19	TD-	Inv. Transmit data input	6
20	VeeT	Transmitter ground	

EUROLAN SFP

SFP+ 10G SM LC

NOTES	
1	TX Fault is an open collector output, which should be pulled up with a 4.7k~10kΩ resistor on the host board to a voltage between 2.0V and Vcc+0.3V. Logic 0 indicates normal operation; logic 1 indicates a laser fault of some kind. In the low state, the output will be pulled to less than 0.8V.
2	TX Disable is an input that is used to shut down the transmitter optical output. It is pulled up within the module with a 4.7k~10kΩ resistor. Its states are: • Low (0~0.8V): Transmitter on • (>0.8V, <2.0V): Undefined • High (2.0~3.465V): Transmitter Disabled • Open: Transmitter Disabled
3	MOD-DEF 0,1,2 are the module definition pins. They should be pulled up with a 4.7k~10kΩ resistor on the host board. The pull-up voltage shall be VccT or VccR. • MOD-DEF 0 is grounded by the module to indicate that the module is present • MOD-DEF 1 is the clock line of two wire serial interface for serial ID • MOD-DEF 2 is the data line of two wire serial interface for serial ID
4	LOS is an open collector output, which should be pulled up with a 4.7k~10kΩ resistor on the host board to a voltage between 2.0V and Vcc+0.3V. Logic 0 indicates normal operation; logic 1 indicates loss of signal. In the low state, the output will be pulled to less than 0.8V.
5	These are the differential receiver output. They are internally AC-coupled 100Ω differential lines which should be terminated with 100Ω (differential) at the user SERDES.
6	These are the differential transmitter inputs. They are AC-coupled, differential lines with 100Ω differential termination inside the module.

PRODUCT SPECIFICATION

CONNECT IT

EUROLAN SFP

SFP+ 10G SM LC

Recommended application circuit

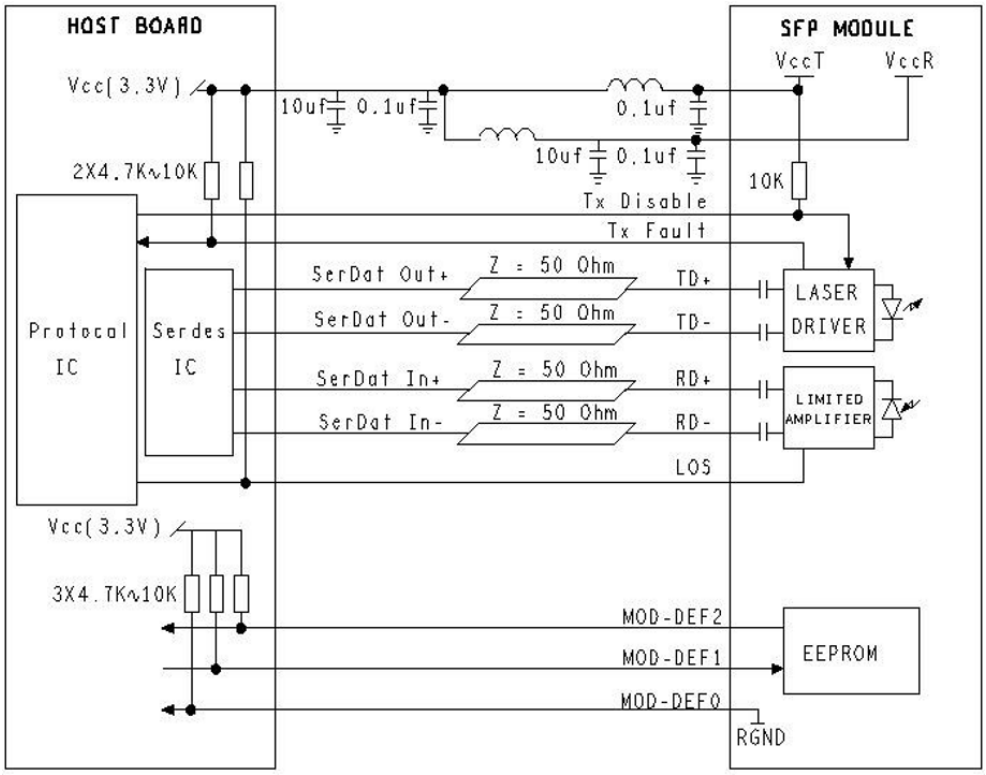
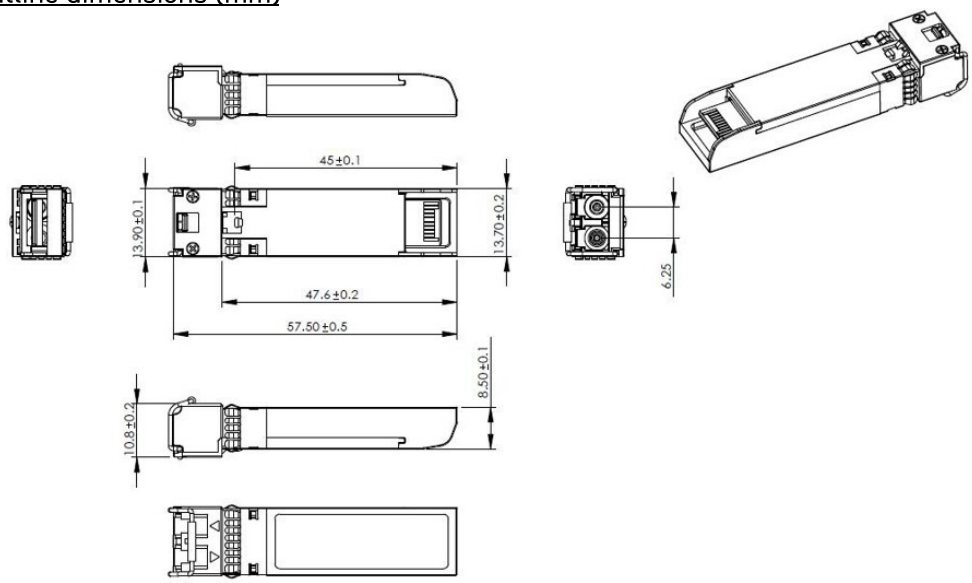
Outline dimensions (mm)