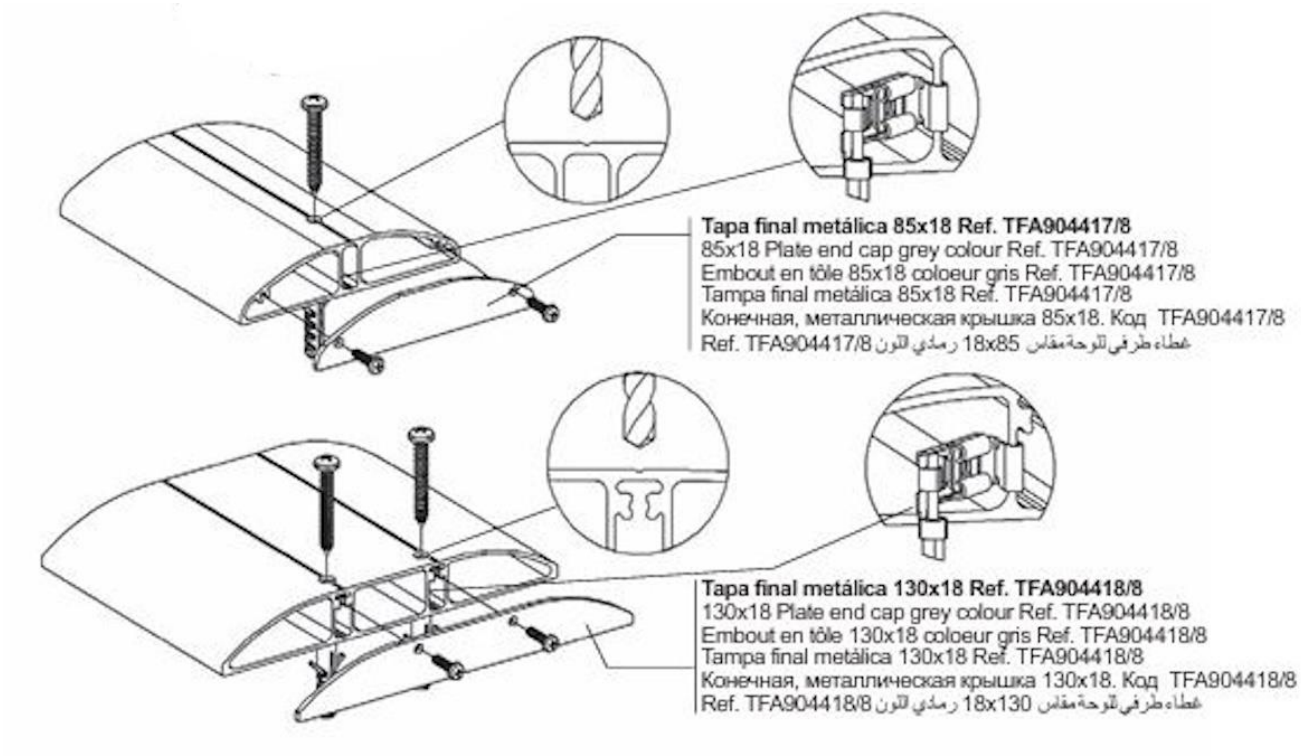Montage Monoblock